DSSE

PRODUCT MANUAL



BELLA 1 DRAWER TROLLEY BT11

Practical Elegance for Everyday Use

The Bella 1 Drawer Beauty Trolley features a spacious drawer and two shelves for convenient storage of salon essentials. Designed with the option to attach a magnifying lamp, reinforced lower shelves, and smooth-rolling professional wheels, it combines practicality with sleek modern style.

Disclaimer

This manual is provided solely as a reference for the safe and proper operation of this model and must not be used for any other purpose. DSSE accepts no liability for any incidental, indirect, or consequential damages arising from the use of this manual or the equipment described.

The information contained herein is subject to change without notice and does not constitute a commitment by DSSE. While every effort has been made to ensure accuracy, DSSE assumes no responsibility for errors or omissions, nor any expressed or implied warranties, including but not limited to merchantability or fitness for a particular purpose. All content is protected by copyright law and may not be copied, reproduced, distributed, or translated, in whole or in part, without prior written authorisation from DSSE.

General Cleaning

- **Routine care – Dust regularly with a soft, dry cloth to prevent buildup.**
- **Mild cleaning – Use a damp cloth with mild soapy water for most surfaces. Wipe dry immediately with a clean cloth.**
- **Avoid abrasive materials or harsh cleaners, as they may damage the surface.**
- **Test first – Always test any new cleaning product on a small, hidden area before full use.**

Safety Information

- **To ensure safe use of this product, please observe the following precautions: Keep children away from the equipment; place it out of their reach.**
- **Use only as intended – The product must only be used for its designed purpose. Misuse may result in injury or damage.**
- **Weight capacity – Do not exceed the recommended weight limit. Overloading may cause product failure or accidents.**
- **Stable placement – Use only on a flat, level surface.**
- **Assembly and maintenance – Ensure all parts are correctly assembled and regularly check that fasteners are secure.**
- **Avoid modifications – Do not alter or tamper with the product, as this may compromise safety and void the warranty.**
- **Professional use only – This product is intended for professional salon/clinic environments and should only be operated by trained personnel.**

Maintenance

- **Regularly inspect all components and fasteners to ensure your product remains structurally sound and fully functional.**
- **Replace any damaged, worn, or missing components immediately.**
- **All maintenance should be carried out by a suitably qualified technician or tradesperson.**
- **Only resume use after proper troubleshooting.**
- **Keep moving parts (e.g., wheels, gas lifts) clean and free from dust or debris to ensure smooth operation.**
- **Use only manufacturer-approved replacement parts to maintain product safety and warranty coverage.**

WARRANTY PERIOD: 12 MONTHS

DATE OF PURCHASE:

INVOICE NUMBER:

TERMS AND CONDITIONS: Please refer to our website for more information about our warranty.

Product Specifications

Height:	**87cm**
Width (total):	**47cm**
Width (inner):	**41cm**
Depth:	**38cm**
Net Weight:	**20 kg**
Gross Weight:	**24 kg**
Max. Shelf Load Capacity:	**15 kg**

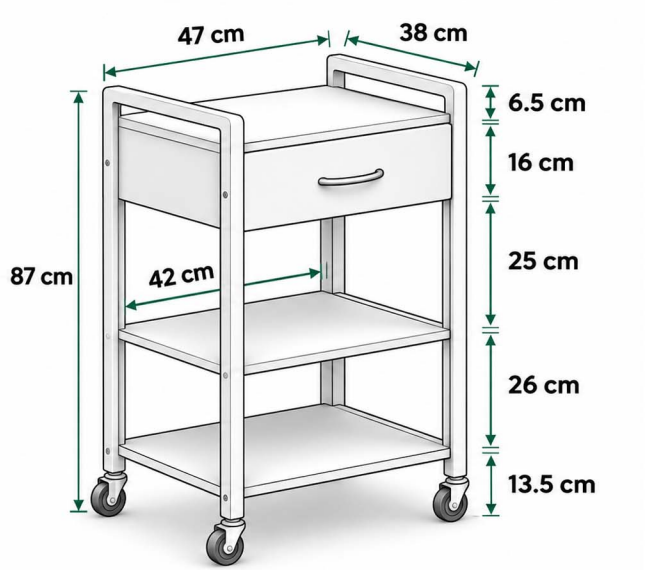

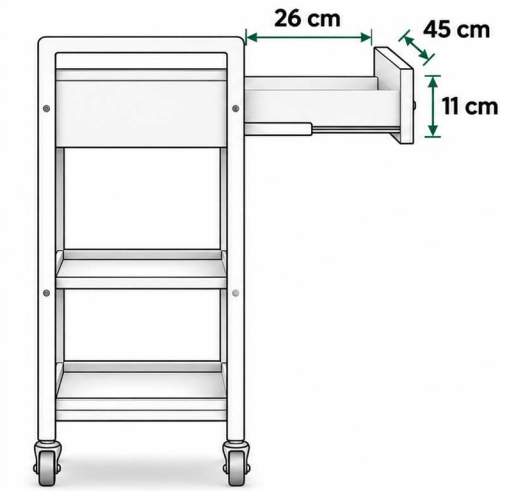





Installation Preparation: Carefully unpack and check all parts and hardware before assembly. Place components on a clean, flat surface to prevent damage. Inspect for any missing or damaged parts. If any issues are found, do not proceed with installation and contact DSSE for assistance.

PARTS LIST

A Side Frame (Left)	B Side Frame (Right)	C Drawer Box	D Shelf Panel	E Support Rod	F Side Rod	G Bolt (M6)	H Allen Key	I Castor Wheel
× 1	× 1	× 1	× 2	× 3	× 4	× 12	× 1	× 4

STEP 1 Attach left side frame

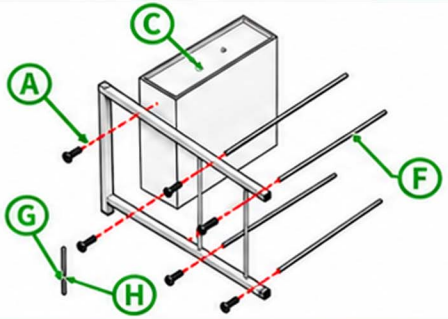

STEP 2 Install support rods

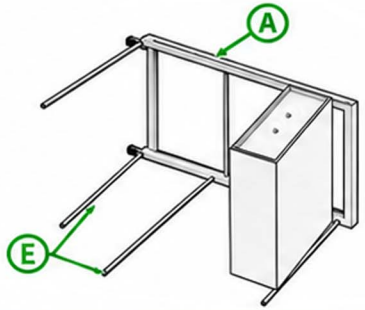

STEP 3 Attach right side frame

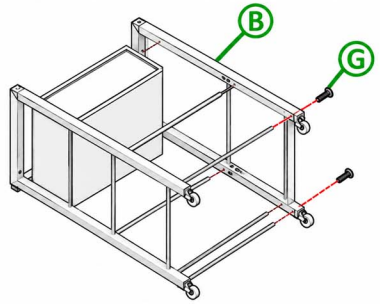

IMPORTANT: Do not fully tighten the screws in the side arms at this stage. Install the shelves in Step 4, then fully tighten all screws.

STEP 4 Install shelf panels

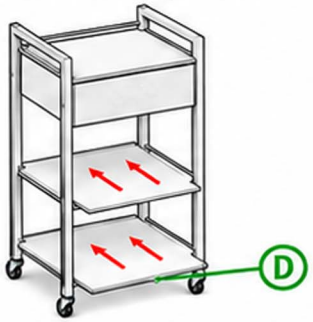

STEP 5 Install drawer handle



5a Inside the drawer, unscrew the 2 screws and remove the handle.

5b Reinsert and tighten the 2 screws from inside the drawer.

STEP 6 Assembly complete



SAFETY WARNING: Ensure all bolts and fittings are securely tightened before use. Do not overload the trolley or use it as a step or seat. Always move the trolley carefully on level surfaces. Regularly inspect all fittings and castor wheels for stability and safe operation.